AURORA MODEL 483 PUMPS

SINGLE STAGE FIRE PUMPS

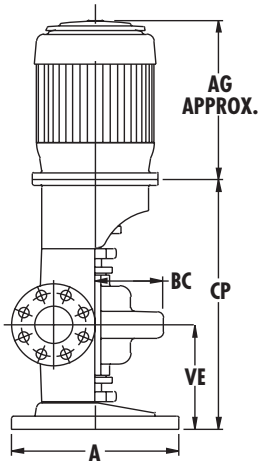

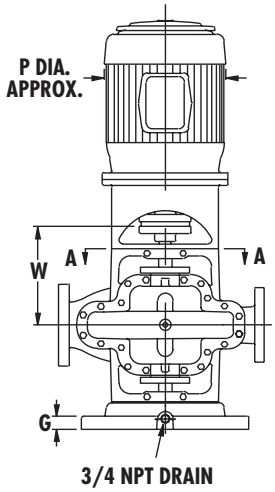

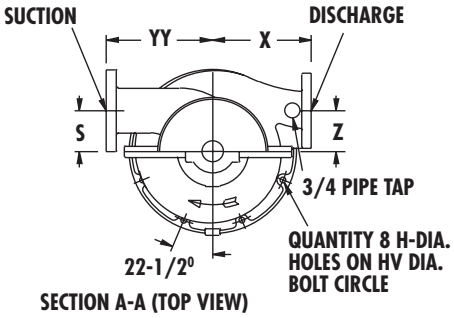

RIGHT HAND ROTATION

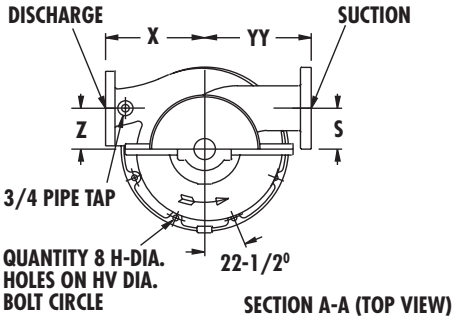

LEFT HAND ROTATION

BASE	1	2	3
A	18 (457)	22 (559)	30 (762)
G	1-3/4 (44)	1-3/4 (44)	2 (51)
H	3/4 (19)	3/4 (19)	7/8 (22)
HW	16-1/4 (413)	20 (508)	28 (711)

☐ STANDARD 125# SUCTION AND DISCHARGE FLANGES

☐ OPTIONAL 125# SUCTION AND 250# DISCHARGE FLANGES

☐ OPTIONAL 250# SUCTION AND 250# DISCHARGE FLANGES

MOTOR FRAME	213HP	215HP	254HP	256HP	284HP	286HP	324HP	326HP	364HP	365HP	404HP	405HP	444HP	445HP
P	10	11	12	12	14	14	16	16	21	21	22	22	24	24
AG	18	18	20	22	23	24	37	37	40	40	45	45	43	43

PUMP SIZE DISCH	PUMP SIZE MODEL	PUMP SIZE CASE BORE	SUCTION	POWER SERIES	BASE	S	W	X	Z	BC	VE	YY	CP 213HP	CP 215HP	CP 254HP	CP 256HP	CP 284HP	CP 286HP	CP 324HP	CP 326HP	CP 364HP	CP 365HP	CP 404HP	CP 405HP	CP 444HP	CP 445HP
2-1/2	483	10	3	2	1	4 (102)	13-1/2 (343)	9-3/4 (248)	4 (102)	8 (203)	13 (330)	10 (254)	30	30	30	30	32	32	32	32	32	32				
3	483	10	4	2	1	4-1/2 (114)	13-1/2 (343)	10 (254)	4-1/2 (114)	7-3/16 (183)	13 (330)	11 (279)	30	30	30	30	32	32	32	32	32	32				
4	483	11	5	3	2	5 (127)	14-1/2 (368)	11-1/4 (286)	5 (127)	8-5/16 (211)	14 (356)	12-3/4 (324)			33	33	35	35	35	35	35	35	35	35		
4	483	15	5	3	2	5-1/2 (140)	14-1/2 (368)	13 (330)	5-1/2 (140)	9 (229)	14 (356)	14 (356)				33	35	35	35	35	35	35	35	35		
5	483	11	6	4	2	5-1/2 (140)	16 (406)	11-1/4 (286)	5-1/2 (140)	8-3/4 (222)	15 (381)	13-1/4 (337)			35	35	37	37	37	37	37	37	37	37		
5	483	15	6	4	2	6-1/4 (159)	16 (406)	13-1/4 (337)	6-1/4 (159)	10-1/16 (256)	15 (381)	15 (381)						37	37	37	37	37	37	37		
5	483	17	6	4	2	6-1/4 (159)	16 (406)	14 (356)	6-1/4 (159)	10-1/16 (256	15 (381)	15 (381)							37	37	37	37	37	37		
6	483	11	8	4	2	6-1/4 (159)	16 (406)	11-3/4 (298)	6-1/4 (159)	9-1/4 (935)	15 (381)	14-1/2 (368)					35	37	37	37	37	37	37	37	37	
6	483	15	8	5	3	6-3/4 (171)	18 (457)	14-1/4 (362)	6-3/4 (171)	11-5/16 (287)	17 (432)	16-3/4 (425)							41	41	41	41	41	41	41	41
6	483	18	8	5	3	8 (203)	18 (457)	16 (406)	8 (203)	12-1/2 (318)	17 (432)	18 (457)							41	41	41	41	41	41	41	41
6	483	20	8	5	3	8 (203)	18 (457)	15-3/4 (400)	8 (203)	12-15/16 (239)	17 (432)	18 (457)								41	41	41	41	41	41	41
8	483	12	10	5	3	8 (203)	18 (457)	17 (432)	9 (229)	11-9/16 (294)	17 (432)	17-3/4 (451)							41	41	41	41	41	41	41	41
8	483	17B	10	5	3	8 (203)	18 (457)	17 (432)	8 (203)	12-3/8 (314)	17 (432)	17-3/4 (451)										41	41	41	41	41

NOTES
1. All dimensions are in inches (mm).
2. Dimensions may vary ± 3/8" (10).
3. Not for construction purposes unless certified.
4. Suction and discharge flanges are ANSI standard flat face.
5. Motor dimensions "AG" and "P" will vary based on manufacturer and style of motor. Conduit box is shown in approximate location.

地址：苏州市金鸡湖路128号加城大厦6楼D4室
电话：86-512-6762 8938　传真：86-512-6762 8477

AURORA®
Pentair Water